AirDog® Champ™

High Pressure Fuel Air Separator
with Positive Fuel Air Separation System

INSTALLATION MANUAL

For DETROIT SERIES 60 ENGINES
Model Years 2003-2009





Part No. A6HSDE640

Revised 11/4/2026

AirDog® HEAVY DUTY DIESEL FUEL SYSTEMS
PureFlow TECHNOLOGIES, INC.



PROUDLY MADE IN THE USA

www.airdogdiesel.com
1-573-635-0555 or
1-877-463-4373

Providing "Test Cell Performance" in "Real World Conditions" Since 1993

PATENT
www.AirDogDiesel.com/patents

HEAVY DUTY & INDUSTRIAL
Fuel Systems
by PureFlow® TECHNOLOGIES, INC.

Amazingly Simple Installation

Mounts on frame and connects between the engine transfer (fuel) pump and engine. Air/vapor return line connects to engine fuel return line.

Amazingly Simple Operation

Operates in conjunction with the fuel flow and pressure created by the engine's transfer pump. Separates and removes entrained air plus vapor from fuel pump cavitation before the fuel enters the engine.

The AirDog® Champ is proudly made in the USA and features a 4 year limited warranty.



With PureFlow Technologies AirDog® Champ system installed, your diesel engine can perform as designed, even under the most extreme conditions.

- Improves Fuel Mileage
- Lengthens Injector Life
- Smoother Idle
- Improves Throttle Response
- Maximizes Torque
- Reduces Emissions



PROUDLY MADE IN THE USA

877-GO-DIESEL (877-463-4373)
airdogdiesel.com

TABLE OF CONTENTS

Section 1……Table of Contents

Section 2……Installation and Safety Guidelines

Section 3……Parts List

Section 4……System Overview

Installation Procedures

Section 5……Mounting the AirDog® Champ

Fuel Lines, Fittings, & Fuel Line Upgrade

Section 6A……Fuel Line from Transfer Pump to Secondary Filter Head and/or AirDog® Champ

Section 6B……Fuel Line from AirDog® Champ to Engine Head

Section 6C……Air/Vapor Return to Tank

Maintenance

Section 7……Filter Service

Optional Kits Available



PN FLK-CHP Champ Fuel Line Kit

This kit contains all components most commonly needed when installing the Champ frame mount air separation system using #8 fittings and Eaton Weatherhead supply lines. This kit uses #6 air and vapor return lines and includes 8′ of 1/2″ general purpose high pressure hose to be cut into 2 pieces for the fuel supply running from the pump or secondary filter head/housing, if equipped with one, into the Champ and for the supply running out of the Champ to the head or fuel rail. 7’ of low pressure line is also included for the air and vapor return line.



PN UPG-DEFS Detroit Upgrade Kit

Detroit Series 60 engine utilizes “FOR SEAL” fittings with steel lines on the high pressure side of the transfer pump. These fittings have small passageways and are restrictive to the fuel flow to the engine. To maximize the efficiency of the engine, it is necessary to replace the restrictive fuel fittings and lines with larger and less restrictive lines and fittings. These fittings and #8 DOT approved fuel lines are supplied with the AirDog® Detroit Series 60 Fuel System Upgrade Kit.

INSTALLATION GUIDELINES

The installation of your AirDog® Champ can be made relatively easy by following the steps outlined in this manual, and:

1. Inventory the package components. Notify PureFlow Technologies immediately of any missing or damaged parts.
2. Read the installation manual completely. Understand how the system operates and the installation recommendations before beginning.
3. Proper location of the AirDog® Champ on the vehicle is essential. Consider hazards presented to the equipment by road debris and the elements.
4. Follow the installation recommendations and guidelines contained herein, but please note that individual installations may vary.

SAFETY GUIDELINES

CAUTION: Chock the vehicle's tires to prevent rolling.

CAUTION: Wear safety glasses when operating power tools, such as drills and grinders, or when using a punch or chisel.

CAUTION: Do not drill into or weld the top of the frame rail or within 1-½" of the frame rail flange on the side of the frame rail.

CAUTION: Route the fuel lines and electrical harnesses, keeping them away from hot exhaust components and/or moving parts. Properly secure the fuel lines and electrical harnesses to prevent chafing.

If you are uncertain of any installation procedure, please call PureFlow® Technologies, Inc. at 573-635-0555 for technical assistance.

NOTE: The pictures used in this manual are for example only and may not depict the exact components as found on your truck.

Installation Parts List

QTY	Description	Part Number	Image
1	**Installation Manual**	206-6-0640	
1	**AirDog® Champ High Pressure Air Separator**	A6HS-WIP	
1	**AirDog® Fuel Filter**	FF200	

908-00-0304 Frame Mount Kit

2	**Mounting Bracket**	002-3C-0003 002-3C-0004	
1	**901-08-0100 Hardware Kit** Includes: 4 ea 3/8-16 x 1-1/4 HHCS 4 ea 3/8-16 Hex Nut 4 ea 3/8 Split Lock Washer 4 ea 1/4-20 x 2 SHCS 4 ea 1/4 Split Lock Washer 4 ea 1/4-20 Hex Nut	 1J-1-C20SZ 1S-1-CSZ 1R-6-CSZ 1L-A32C 1R-6-AC 1S-1-AC	

CHPFK-640-PB Installation Kit

960-06-0560 Basic Champ Fitting Kit

2	**#8M JIC x 1/2 M ORB Straight Connector**	4A-1-02-08-08-S	
1	**#6M JIC x 3/8 M ORB Straight Connector**	4A-1-01-06-06-S	

960-06-0640-FK Detroit 03-09 Fitting Kit

1	**#6M JIC x 3/8 F NPTF Straight Connector**	4A-1-04-06-06-S	
1	**3/8 M SAE x 3/8 M SAE x 3/8 M NPTF Tee**	4A-4-08-06-06-B	
1	**#6 x #6 F Union Swivel**	4A-1-22-06-06-B	
1	**#6F SAEX x #6F SAEX Union Swivel** ***(Back of Head)***	4A-2-01-08-06-SZ-XLG	
1	**#8M JIC x 1/4 M NPTF Straight Connector - Ported**	4A-1-02-08-04-S-P	
1	**#8M JIC x 16mm M w/O-Ring Straight Connector - Ported** ***(Transfer Pump)***	4A-1-01-08-16-S-P	

SBK-1000 Sandwich Bracket Kit

OPTIONAL

1	**Sandwich Mounting Bracket Kit for AirDog® & Champ** Includes: 1 Front Bracket (002-3C-0010-SBF), 1 Back Bracket (002-3C-0011-SBB), & 1 Universal Bracket (002-3C-0006PCB)	908-00-8888	
1	**901-08-0100-SB Hardware Kit** Includes: 4 ea 3/8-16 x 1 FHSCS 3 ea 3/8-16 x 3-1/2 HHCS 3 each 3/8-16 x 4-1/2 HHCS 7 ea 3/8-16 Hex Nut 7 ea 3/8 Split Lock Washer	 1M-C16SZ 1J-1-C56SZ 1J-1-C72SZ 1S-1-CSZ 1R-6-CSZ	

See page 3 for additional fuel line kit available.

SYSTEM OVERVIEW

Welcome to the AirDog® Champ
High Pressure Fuel Air Separation System for Class 8 Trucks

The AirDog® Champ with *ADVANCED FUEL AIR SEPARATION* is a premium fuel air separator for the Detroit Series 60 engines.

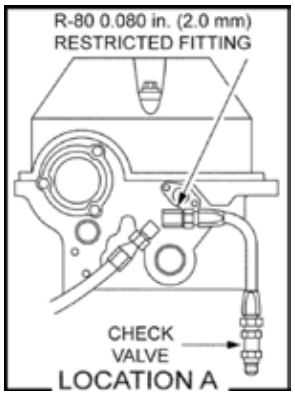

The AirDog® Champ is installed between the engine transfer pump or secondary fuel filter and the engine fuel rail, to remove virtually all entrained air and vapor from the fuel flow to the engine. Additionally, the engine rail pressure must be set correctly to completely fill the injector barrel. Please consult your DDEC manual for your engine for correct (rail) fuel pressure settings.

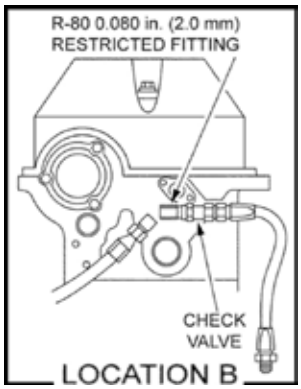

TYPICAL INSTALLATION LAYOUT

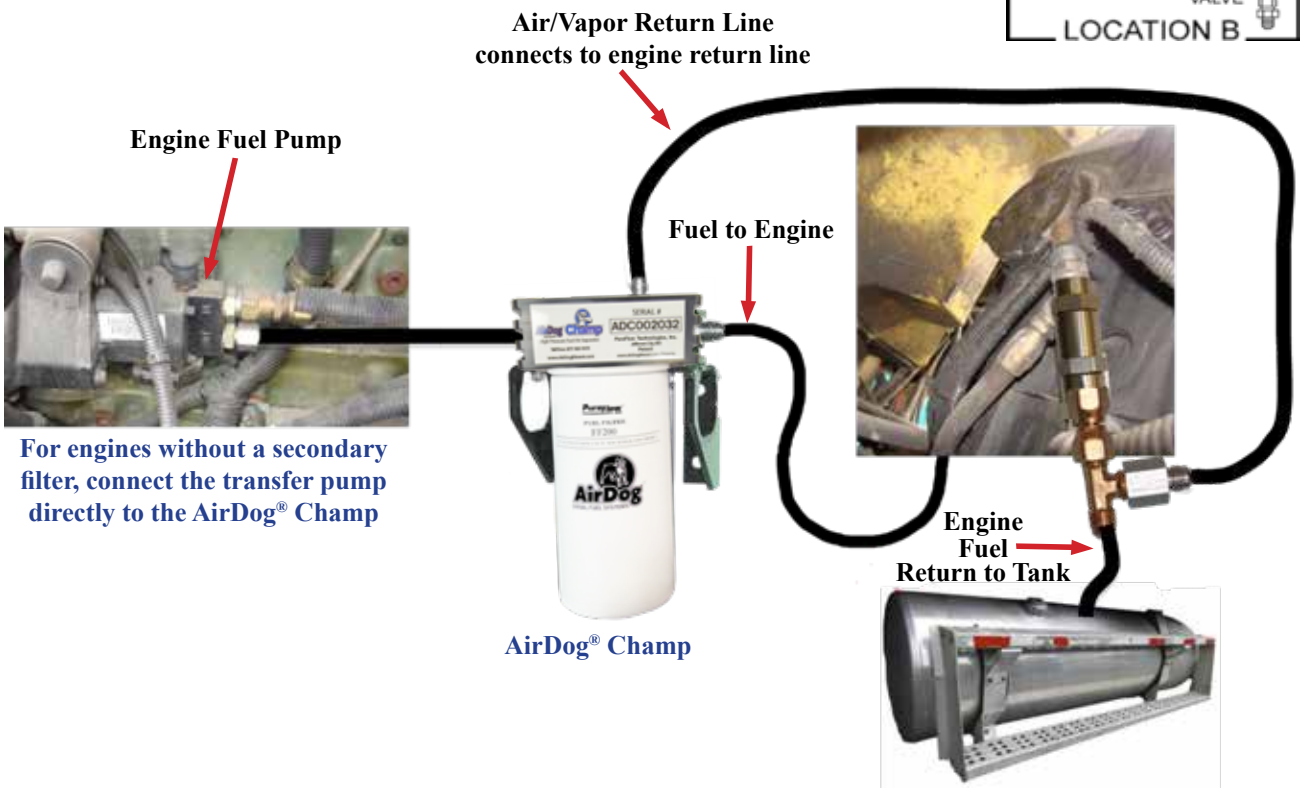

For engines without a secondary filter, connect the transfer pump directly to the AirDog® Champ

AirDog® Champ

OPTIONAL KIT AVAILABLE (PN: SBK-1000)

Mounting the Champ to the Frame without Drilling

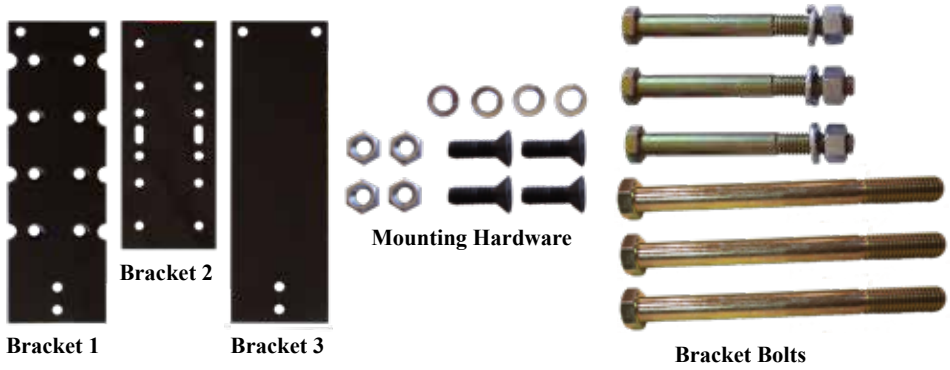

Determine which holes in bracket 1 that you are going to need by holding it up to the frame of your vehicle.

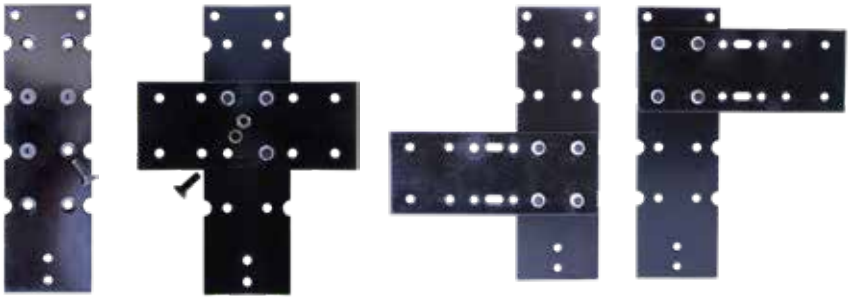

Use mounting hardware to mount bracket 1 to bracket 2. The position of bracket 2 can be adjusted vertically and horizontally to suit your particular needs.

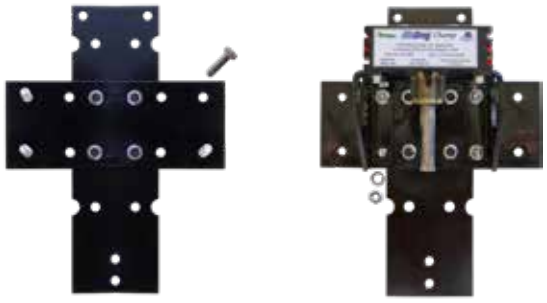

Using product mounting hardware, mount product to brackets.



Install 2 of the frame bracket bolts on top of bracket 1 & bracket 3. Slide over frame and install bottom bolt.

Note: 3.5” and 4.5” bolts are included. Use the length best suited to your vehicle’s frame width.



Tighten bolts as needed.
Install filter.

Mounting the Champ to the Frame by Drilling

Selecting the best location to mount the AirDog® Champ.

Installing the AirDog® Champ at the proper location on the vehicle is most important. When deciding where to locate the AirDog®, the following points should be considered:

- Best relationship to the secondary fuel filter and back of engine head.
- Protection from the elements and road debris.
- Accessibility for service.

Figures 2 and 3 depict the AirDog® Champ mounted on the frame. There are many variations in the arrangements of the components on the various trucks. With a little ingenuity, the AirDog® Champ can be easily installed on any Class 8 truck.



Figure 2

Figure 3



5-1. Hold the AirDog® Champ, with the brackets and filter attached, next to the frame at the selected mounting location. Check for clearance. If mounted between the frame and steer tire, turn the steering wheel fully to the left and right to check for tire clearance.



Figure 4





Figure 5



5-2. Mark and center punch the hole locations. Drill a 3/8” hole at each of the 4 locations and attach the AirDog® Champ brackets.

WARNING! DO NOT DRILL INTO OR DAMAGE ANY WIRING, AIR LINES, OR OTHER COMPONENTS LOCATED BEHIND THE FRAME RAIL.

FUEL LINE OVERVIEW

AirDog® Series 60 Fuel Line Upgrade

The Detroit Diesel Series 60 engine (model years 2003-2009) utilizes “FOR SEAL” or face o-ring fittings on the high pressure side of the transfer pump. These fittings have small passageways and are restrictive to the fuel flow to the engine. To maximize the efficiency of the 2003-2009 Detriot Series 60 engine, it is necessary to replace the “OE” restrictive fuel fittings and lines with the larger and less restrictive AirDog® Champ fittings. Special AirDog® Champ fittings for this purpose are supplied with the installation kit. #8 fuel lines are available from your local parts house.



“OE” 14mm Face O-Ring Fitting with Restricted Passageway

Figure 6

VS



AirDog® Ported Fitting #8 JIC x 14mm with Large Passageway

Figure 7

Fuel Supply Line: The fuel supply line from the transfer pump to the AirDog® Champ and to the engine should be size 8.

Air/Vapor Return Line: The AirDog® Champ return line should be connected to the engine’s return line, low pressure side. A size 6 line for the air/vapor return line is adequate.

FUEL LINE NOT INCLUDED - SEE PAGE 3 FOR AVAILABLE FUEL LINE KIT - USING THIS OPTIONAL COST EFFECTIVE KIT WILL MAKE INSTALLATION EASIER AND MORE EFFICIENT.

Section 6A: Fuel Lines, Fittings, & Fuel Line Upgrade



Figure 8

6A-1. Install fittings in the AirDog® Champ as follows:
A #8 M JIC x 1/2" M ORB (***PN 4A-1-02-08-08-S***) **"FUEL IN"**
B #6 M JIC x 3/8" M ORB (***PN 4A-1-01-06-06-S***) **"AIR RETURN"**
C #8 M JIC x 1/2" M ORB (***PN 4A-1-02-08-08-S***) **"FUEL OUT"**

6A-2. Remove the original steel fuel line and fitting from the transfer pump and install a ported 16mm M x #8 M JIC fitting ***(PN 4A-1-01-08-16-S-P)*** **OR** a 1/4" M NPT x #8 M JIC fitting ***(PN 4A-1-02-08-04-S-P)*** into the transfer pump "Out" port.


Figure 9

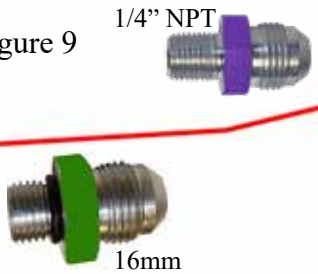



Figure 10

6A-3. Measure, cut, and assemble a #8 fuel line to connect the engine transfer pump to the Champ "FUEL IN" fitting.

Section 6B: Fuel Line From Engine Head to AirDog® Champ

6B-1. Remove the fuel supply line and inlet fitting from the back of the engine head.

6B-2. Install the new extended 3/8" M NPT x #8 M JIC extra long 90° elbow ***(PN 4A-2-01-08-06-SZ-XLG)*** in the inlet port at the back of the engine head.

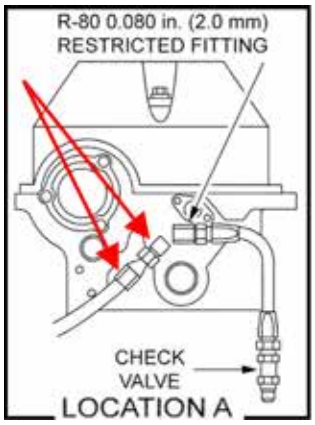

Figure 11

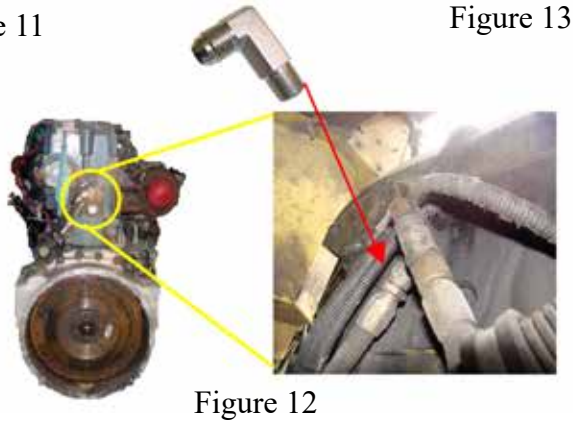

Figure 12

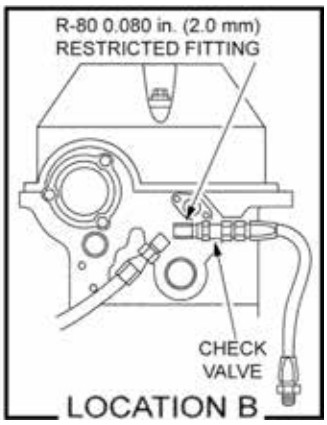

Figure 13

6B-3. Measure, cut, and assemble a #8 fuel line to connect the AirDog® Champ outlet port to the new #8 JIC fuel inlet supply fitting just installed in the back of the engine head.

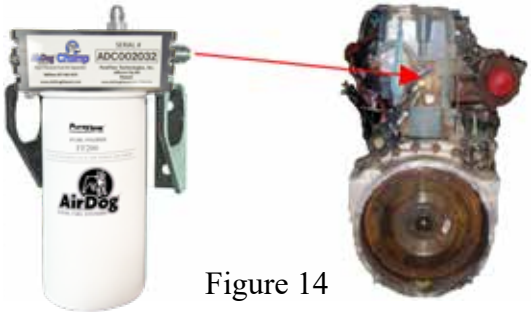

Figure 14

Section 6C: Air/Vapor Return to Tank

6C-1. Remove the ENGINE fuel return line from the check valve at the back of the engine head.

6C-2. Assemble the AirDog® Champ return tee ***(PN 4A-1-04-06-06-S, PN 4A-4-08-06-06-B, & PN 4A-1-22-06-06-B)*** and install it on the outlet side of the Detroit check valve. Reconnect the original engine return line to the return tee.

6C-3. Measure, cut, and assemble a #6 air/vapor return line and connect the Champ air/vapor return port to the return tee just installed.

NOTE: Secure all fuel lines to prevent damage from abrasion.



Figure 15



Figure 16



Figure 17



Figure 18



Figure 19

Servicing the AirDog® Champ Fuel Filter

The AirDog® fuel filters have a typical lifespan of 25,000+ miles, and up to 40,000 miles, as they are made with a high-quality and high-capacity synthetic media, as opposed to a paper element, and filter life is affected by many variables. In any case, we do not recommend exceeding 40,000 miles of service with a fuel filter. It is recommended that you keep a replacement AirDog® fuel filter on hand, ready for replacement. When replacing the fuel filter, be sure to clean the under side of the Champ base. Rub clean diesel fuel or oil on filter seal before installing to ensure a proper seal. Follow the instructions on the filter for proper tightening procedures.



Built in check valve Prevents fuel from draining from the engine head during filter changes

AirDog® Champ Fuel Filter

NOTE: Due to the fact that fuel filters are often OVER TIGHTENED and difficult to remove, it is suggested to carry a second filter wrench to use as a backup wrench when changing the fuel filter.

Dispose of waste fuel and used filters properly to protect our environment.



AirDog®
HEAVY DUTY DIESEL FUEL SYSTEMS

www.airdogdiesel.com
1-877-463-4373 or
1-573-635-0555

Copyright© 2016
CD Patents, LLC

Bulletin No. 206-6-0640
Revised Nov. 4, 2026

All Rights Reserved